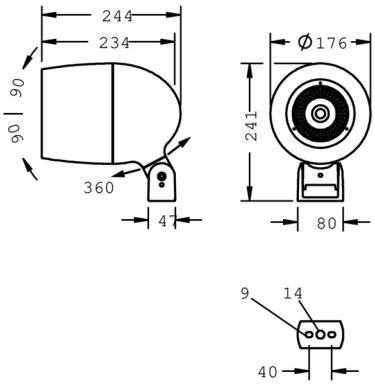

Metaspot 2

8 242 066 319

35 W, 3525 lm, 3000 K warm white, Zhaga 18, narrow beam 10°

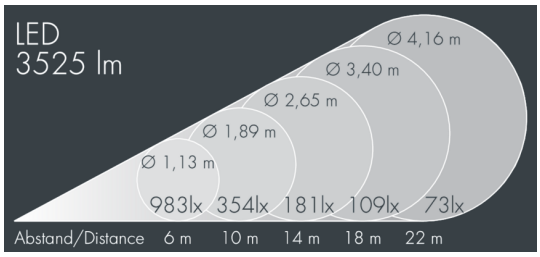

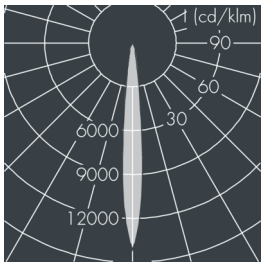

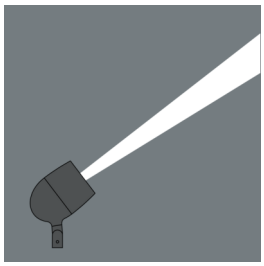

Customized solutions and modifications are possible: Special RAL, DB or NCS colours as polyester powder coat, luminaires in 2700 K and other colour temperatures and versions for high ambient temperature.

Specification text

housing made of corrosion-resistant die-cast aluminum AlSi12, polyester powder coated by high-quality and UV-stabilized coating process, Colour: white RAL 9002, all exterior parts are stainless steel, tempered safety glass, anti-reflective coating from 1 side, dark screenprint, silicon gasket, tool-free twist closure, mounting bracket: 2 drilled holes Ø 9 mm, spacing 40 mm, 1 centre hole Ø 14 mm, tilt range: 180°, cable gland: M20, connecting terminal: 3 pole, light source completely shielded, high gloss aluminium reflector, integral driver (AC/DC), CRI > 80, 3, service life L90/B10 > 50.000 h, Beam angle (FWHM): 10°, luminous flux: 3525 lm, wattage: 35 W, delivered lumens 101 lm/W, protection type IP65, protection class I, impact resistance IK08, windage area 0,045 m², dimensions: Ø 176 mm, width 245 mm, weight 3.6 kg

The modular luminaire design makes the replacement of components possible. The product meets the demands of the applicable EU guidelines and product safety regulations and bears the CE mark.

IP65 IK08

Specification

Wattage	35 W	Beam angle (FWHM)	10°
Delivered lumens	101 lm/W	Housing colour	white RAL 9002
Light source	LED 3000 K	Power supply cable	Ø 6 – 13 mm
Color Rendering Index	CRI > 80	Protection type	IP65
Colour tolerance	3	Protection class	I
Lifetime ta 25° C	L90/B10 > 50.000 h	Impact resistance	IK08
Control gear	Zhaga 18	Windage area	0,045m²
Input voltage AC	220 – 240 V	Dimensions	Ø 176 mm, width 245 mm
Input voltage DC	220 – 240 V	Weight	3,60 kg
Voltage protection	6 kV L/N | 10 kV L/PE	Max. ambient temperature ta	45°
Luminaires per B16A / C16A	20 / 33		