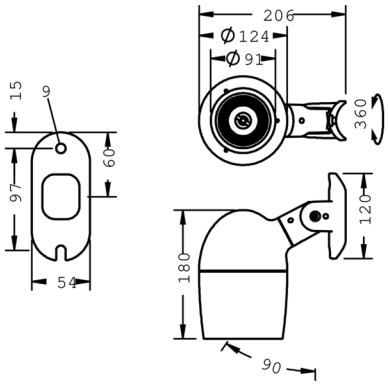

Metaspot 1

8 241 246 179

15 W, 1011 lm, 3000 K warm white, DALI, linear, rotatable 36° / 9°

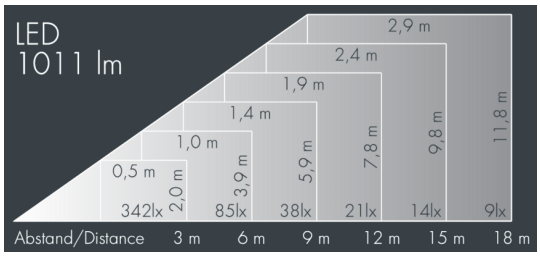

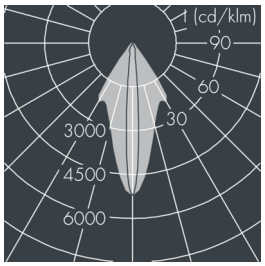

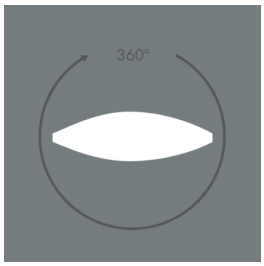

Customized solutions and modifications are possible: Special RAL, DB or NCS colours as polyester powder coat, luminaires in 2700 K and other colour temperatures and versions for high ambient temperature.

Specification text

housing made of corrosion-resistant die-cast aluminum AlSi12, polyester powder coated by high-quality and UV-stabilized coating process, Colour: black RAL 7021, all exterior parts are stainless steel, tempered safety glass, anti-reflective coating from 1 side, silicon gasket, tool-free twist closure, for installation on poles Ø 60 - 100 mm, tiltable base made of powder coated aluminum, 2 drilled holes Ø 9 mm, spacing 95 mm, 1 centre hole Ø 40 mm, tilt range: 90°, 360° adjustable, cable gland: M20, connecting terminal: 5 pole, light source completely shielded, high gloss aluminium reflector, integral driver (AC/DC), CRI > 80, 3, service life L80/B10 > 50.000 h, Beam angle (FWHM): 36° / 9°, luminous flux: 1011 lm, wattage: 15 W, delivered lumens 67 lm/W, protection type IP65, protection class I, impact resistance IK08, windage area 0,026 m², dimensions: Ø 124 mm, width 180 mm, weight 2.3 kg

The modular luminaire design makes the replacement of components possible. The product meets the demands of the applicable EU guidelines and product safety regulations and bears the CE mark.

IP65 IK08

Specification

Wattage	15 W	Beam angle (FWHM)	36° / 9°
Delivered lumens	67 lm/W	Housing colour	black RAL 7021
Light source	LED 3000 K	Power supply cable	Ø 6 – 13 mm
Color Rendering Index	CRI > 80	Protection type	IP65
Colour tolerance	3	Protection class	I
Lifetime ta 25° C	L80/B10 > 50.000 h	Impact resistance	IK08
Control gear	DALI	Windage area	0,026m²
Input voltage AC	220 – 240 V	Dimensions	Ø 124 mm, width 180 mm
Input voltage DC	220 – 240 V	Weight	2,30 kg
Voltage protection	2 kV L/N | 4 kV L/PE	Max. ambient temperature ta	40°
Luminaires per B16A / C16A	50 / 85		