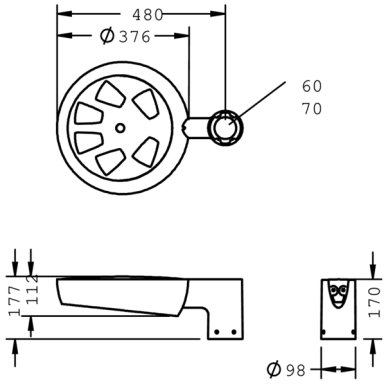


## Metaspace

8 217 347 089

6 × 6,3 W, 3522 lm, 2700 K warm white, asymmetrical wide beam 64° / 133°

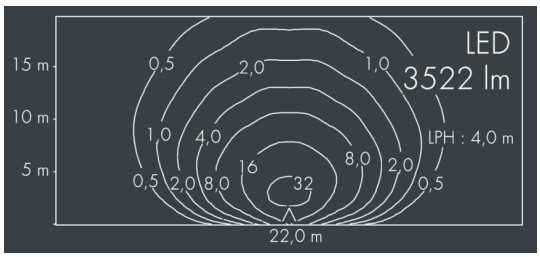


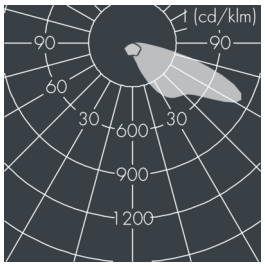


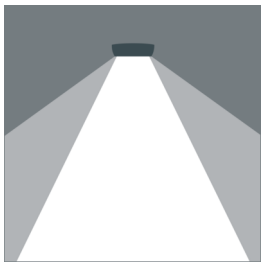

Customized solutions and modifications are possible: Special RAL, DB or NCS colours as polyester powder coat, luminaires in 2700 K and other colour temperatures and versions for high ambient temperature.

### Specification text

housing made of corrosion-resistant die-cast aluminum AlSi12, polyester powder coated by high-quality and UV-stabilized coating process, Colour: black RAL 7021, all exterior parts are stainless steel, tempered high effiency safety glass, anti-reflective coating from 1 side, dark screenprint, silicon gasket, closure with 5 stainless steel screws, with pole top fitter for 1 luminarie for poles Ø 60/76 mm, fastening with 4 set screws M8, cable gland: M20, with 8 m cable H07RN-F3G1, connecting terminal: 3 pole, highly efficient metallized PC reflector, integral driver (AC/DC), CRI > 80, 3, service life L80/B20 > 50.000 h,
Beam angle (FWHM): 64° / 133°, luminous flux: 3522 lm, wattage: 38 W, delivered lumens 93 lm/W, protection type IP65, protection class II, impact resistance IK08, windage area 0,056 m², dimensions: Ø 376 mm, width 112 mm, weight 5.1 kg

The modular luminaire design makes the replacement of components possible. The product meets the demands of the applicable EU guidelines and product safety regulations and bears the CE and ENEC marks.

IP65 IK08

## Specification

| | | | |
|---|---|---|---|
| Wattage | 38 W | Beam angle (FWHM) | 64° / 133° |
| Delivered lumens | 93 lm/W | Housing colour | black RAL 7021 |
| Light source | LED 2700 K | Protection type | IP65 |
| Color Rendering Index | CRI > 80 | Protection class | II |
| Colour tolerance | 3 | Impact resistance | IK08 |
| Lifetime ta 25° C | L80/B20 > 50.000 h | Windage area | 0,056m² |
| Control gear | on / off | Dimensions | Ø 376 mm, width 112 mm |
| Input voltage AC | 220 – 240 V | Weight | 5,10 kg |
| Input voltage DC | 220 – 240 V | Max. ambient temperature ta | 40° |
| Voltage protection | 6 kV L/N \| 10 kV L/PE | | |
| Luminaires per B16A / C16A | 20 / 33 | | |