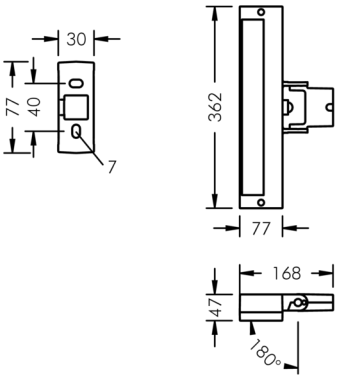

Highline

8 730 156 089

9 × 2,5 W, 1121 lm, 3000 K warm white, asymmetrical 35° / 30°

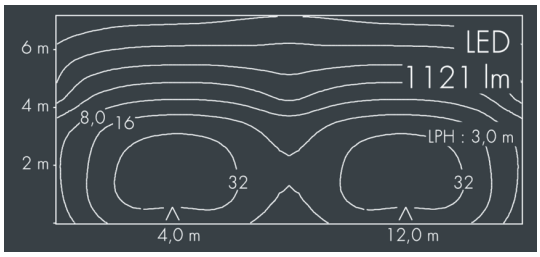

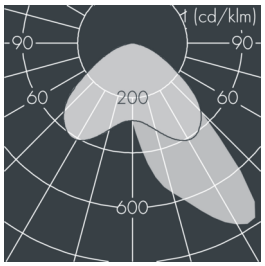

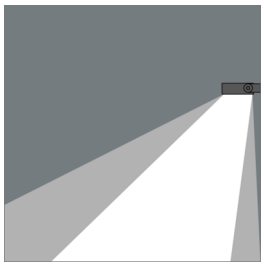

Customized solutions and modifications are possible: Special RAL, DB or NCS colours as polyester powder coat, luminaires in 2700 K and other colour temperatures and versions for high ambient temperature.

Specification text

housing made of corrosion-resistant die-cast aluminum AlSi12, polyester powder coated by high-quality and UV-stabilized coating process, Colour: silver grey , all exterior parts are stainless steel, tempered safety glass, anti-reflective coating from 1 side, with partial frosting for uniform light diffraction and dark silk-print, silicon gasket, closure with 2 stainless steel screws, wall bracket: 2 elongated holes Ø 6,5 mm, spacing 40 mm, tilt range: 180°, cable gland: M20, connecting terminal: 3 pole, highly efficient optics made of transparent thermoplastic for precise lighting tasks , integral driver (AC/DC), CRI > 80, max 2 SDCM, service life L90/B10 > 50.000 h, luminous flux: 1121 lm, wattage: 22 W, delivered lumens 52 lm/W, protection type IP67, protection class I, impact resistance IK08, windage area 0,029 m², dimensions (L×H×W): 362 × 47 × 77 mm, weight 1.645 kg

The modular luminaire design makes the replacement of components possible. The product meets the demands of the applicable EU guidelines and product safety regulations and bears the CE and ENEC marks.

IP67 IK08

Specification

Wattage	22 W	Housing colour	silver grey
Delivered lumens	52 lm/W	Power supply cable	Ø 6 – 13 mm
Light source	LED 3000 K	Protection type	IP67
Color Rendering Index	CRI > 80	Protection class	I
Colour tolerance	max 2 SDCM	Impact resistance	IK08
Lifetime ta 25° C	L90/B10 > 50.000 h	Windage area	0,029m²
Control gear	on / off	Dimensions	362 × 47 × 77 mm
Input voltage AC	110 – 240 V	Weight	1,65 kg
Input voltage DC	195 – 255 V	Max. ambient temperature ta	45°
Voltage protection	2 kV L/N | 4 kV L/PE		
Luminaires per B16A / C16A	50 / 85		