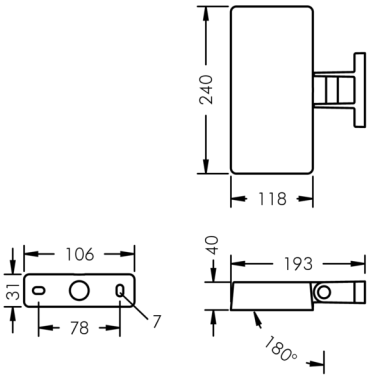

Expolux

8 990 145 019

18 W, 1614 lm, 4000 K neutral white,
wall washer 20° / 82°

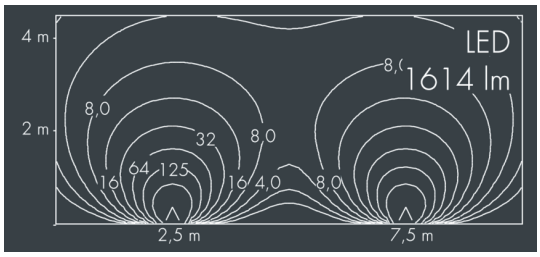

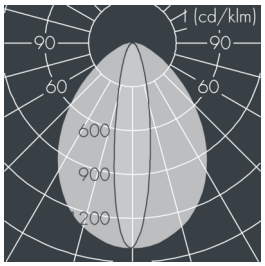

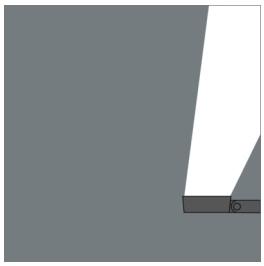

Customized solutions and modifications are possible: Special RAL, DB or NCS colours as polyester powder coat, luminaires in 2700 K and other colour temperatures and versions for high ambient temperature.

Specification text

housing made of corrosion-resistant die-cast aluminum AlSi12, polyester powder coated by high-quality and UV-stabilized coating process, Colour: black RAL 7021, all exterior parts are stainless steel, UV stabilised, impact-resistant polycarbonate cover , silicon gasket, closure with 4 stainless steel screws, wall mounting plate: 2 drilled holes Ø 7 mm, spacing 78 mm, tilt range: 180°, cable gland: M20, connecting terminal: 3 pole, partially frosted baton lens made of highly efficient optical silicon, integral driver (AC/DC), 80, max 2 SDCM, service life L80/B10 > 50.000 h, Beam angle (FWHM): 20° / 82°, luminous flux: 1614 lm, wattage: 18 W, delivered lumens 90 lm/W, protection type IP65, protection class I, impact resistance IK10, windage area 0,03 m², dimensions (L×H×W): 115 × 40 × 235 mm, weight 2.1 kg

The modular luminaire design makes the replacement of components possible. The product meets the demands of the applicable EU guidelines and product safety regulations and bears the CE and ENEC marks.

IP65 IK10

Specification

Wattage	18 W	Beam angle (FWHM)	20° / 82°
Delivered lumens	90 lm/W	Housing colour	black RAL 7021
Light source	LED 4000 K	Power supply cable	Ø 6 – 13 mm
Color Rendering Index	80	Protection type	IP65
Colour tolerance	max 2 SDCM	Protection class	I
Lifetime ta 25° C	L80/B10 > 50.000 h	Impact resistance	IK10
Control gear	on / off	Windage area	0,03m²
Input voltage AC	220 – 240 V	Dimensions	115 × 40 × 235 mm
Input voltage DC	220 – 240 V	Weight	2,10 kg
Voltage protection	2 kV L/N | 4 kV L/PE	Max. ambient temperature ta	40°
Luminaires per B16A / C16A	50 / 85		