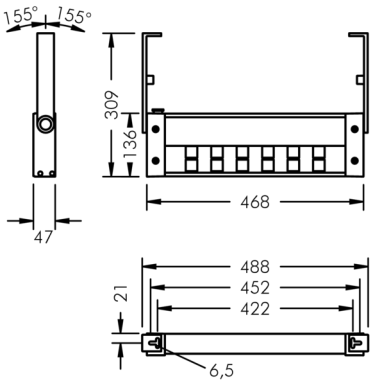

Ecovision

8 707 155 209

12 × 2,5 W, 2395 lm, 4000 K neutral white, 1-10V, wall washer 15° / 103°

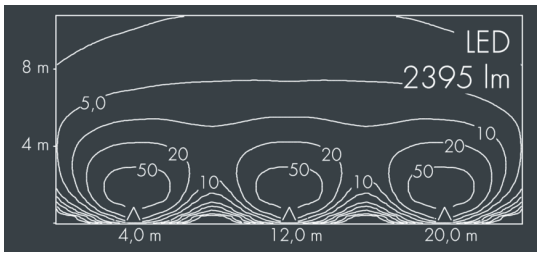

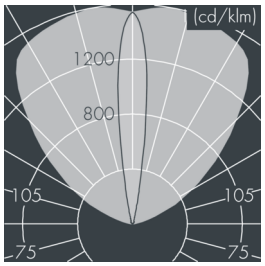

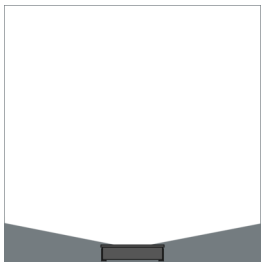

Customized solutions and modifications are possible: Special RAL, DB or NCS colours as polyester powder coat, luminaires in 2700 K and other colour temperatures and versions for high ambient temperature.

Specification text

housing made corrosion-resistant die-cast aluminum AlSi12, polyester powder coated by high-quality and UV-stabilized coating process, Colour: silver grey , all exterior parts are stainless steel, UV stabilised, impact-resistant polycarbonate cover , silicon gasket, with 4 stainless steel screws, wall arms: 2 drilled holes Ø 6.5 mm, spacing 422 mm, tilt range: 310°, cable gland: PG11, connecting terminal: 5 pole, highly efficient optics made of transparent thermoplastic for precise lighting tasks , integral driver (1-10V), CRI > 80, max 2 SDCM, service life L90/B10 > 50.000 h,
Beam angle (FWHM): 15° / 103°, luminous flux: 2395 lm, wattage: 29 W, delivered lumens 83 lm/W, protection type IP65, protection class I, impact resistance IK10, windage area 0,06 m², dimensions (L×H×W): 470 × 47 × 135 mm, weight 2.4 kg

The modular luminaire design makes the replacement of components possible. The product meets the demands of the applicable EU guidelines and product safety regulations and bears the CE mark.

IP65 IK10

Specification

Wattage	29 W	Beam angle (FWHM)	15° / 103°
Delivered lumens	83 lm/W	Housing colour	silver grey
Light source	LED 4000 K	Power supply cable	Ø 7 – 9 mm
Color Rendering Index	CRI > 80	Protection type	IP65
Colour tolerance	max 2 SDCM	Protection class	I
Lifetime ta 25° C	L90/B10 > 50.000 h	Impact resistance	IK10
Control gear	1-10V	Windage area	0,06m²
		Dimensions	470 × 47 × 135 mm
		Weight	2,40 kg
		Max. ambient temperature ta	35°